CITIZEN
Micro HumanTech

LINE THERMAL PRINTER

MODEL CT-S310II

User's Manual

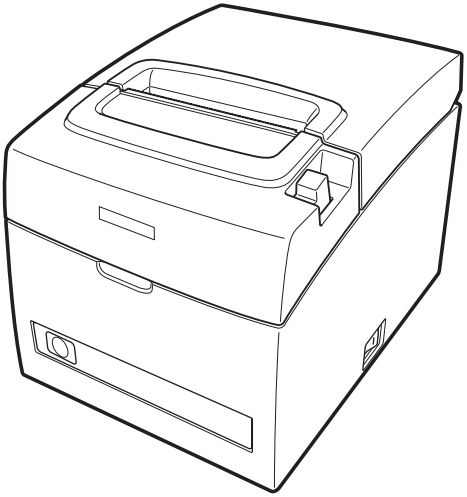

CITIZEN SYSTEMS JAPAN CO., LTD.

WEEE MARK

En If you want to dispose of this product, do not mix it with general household waste. There is a separate collection systems for used electronics products in accordance with legislation under the WEEE Directive (Directive 2002/96/EC) and is effective only within European Union.

Ge Wenn Sie dieses Produkt entsorgen wollen, dann tun Sie dies bitte nicht zusammen mit dem Haushaltsmüll. Es gibt im Rahmen der WEEE-Direktive innerhalb der Europäischen Union (Direktive 2002/96/EC) gesetzliche Bestimmungen für separate Sammelsysteme für gebrauchte elektronische Geräte und Produkte.

Fr Si vous souhaitez vous débarrasser de cet appareil, ne le mettez pas à la poubelle avec vos ordures ménagères. Il existe un système de récupération distinct pour les vieux appareils électroniques conformément à la législation WEEE sur le recyclage des déchets des équipements électriques et électroniques (Directive 2002/96/EC) qui est uniquement valable dans les pays de l'Union européenne.
Les appareils et les machines électriques et électroniques contiennent souvent des matières dangereuses pour l'homme et l'environnement si vous les utilisez et vous vous en débarrassez de façon inappropriée.

Sp Si desea deshacerse de este producto, no lo mezcle con residuos domésticos de carácter general. Existe un sistema de recogida selectiva de aparatos electrónicos usados, según establece la legislación prevista por la Directiva 2002/96/CE sobre residuos de aparatos eléctricos y electrónicos (RAEE), vigente únicamente en la Unión Europea.

It Se desiderate gettare via questo prodotto, non mescolatelo ai rifiuti generici di casa. Esiste un sistema di raccolta separato per i prodotti elettronici usati in conformità alla legislazione RAEE (Direttiva 2002/96/CE), valida solo all'interno dell'Unione Europea.

Du Deponeer dit product niet bij het gewone huishoudelijk afval wanneer u het wilt verwijderen. Er bestaat ingevolge de WEEE-richtlijn (Richtlijn 2002/96/EG) een speciaal wettelijk voorgeschreven verzamelsysteem voor gebruikte elektronische producten, welk alleen geldt binnen de Europese Unie.

Da Hvis du vil skille dig af med dette produkt, må du ikke smide det ud sammen med dit almindelige husholdningsaffald. Der findes et separat indsamlingssystem for udtjente elektroniske produkter i overensstemmelse med lovgivningen under WEEE-direktivet (direktiv 2002/96/EC), som kun er gældende i den Europæiske Union.

Por Se quiser deitar fora este produto, não o misture com o lixo comum. De acordo com a legislação que decorre da Directiva REEE – Resíduos de Equipamentos Eléctricos e Electrónicos (2002/96/CE), existe um sistema de recolha separado para os equipamentos electrónicos fora de uso, em vigor apenas na União Europeia.

Pol Jeżeli zamierzasz pozbyć się tego produktu, nie wyrzucaj go razem ze zwykłymi domowymi odpadkami. Według dyrektywy WEEE (Dyrektywa 2002/96/EC) obowiązującej w Unii Europejskiej dla używanych produktów elektronicznych należy stosować oddzielne sposoby utylizacji.

Declaration of Conformity

This printer conforms to the following Standards:

The Low Voltage Directive 2006/95/EC, the EMC Directive 2004/108/EC, the RoHS Directive 2002/95/EC, and the WEEE Directive 2002/96/EC.

LVD : EN60950-1

EMC: EN55022 Class A
EN61000-3-2
EN61000-3-3
EN55024

This declaration applies only to the 230-V model.

IMPORTANT: This equipment generates, uses, and can radiate radio frequency energy and if not installed and used in accordance with the instruction manual, may cause interference to radio communications. It has been tested and found to comply with the limits for a Class A computing device pursuant to Subpart J of Part 15 of FCC Rules, which are designed to provide reasonable protection against such interference when operated in a commercial environment. Operation of this equipment in a residential area is likely to cause interference, in which case the user at his own expense will be required to take whatever measures may be necessary to correct the interference.
CAUTION: Use shielded cable for this equipment.

Sicherheitshinweis
Die Steckdose zum Anschluß dieses Druckers muß nahe dem Gerät angebracht und leicht zugänglich sein.

For Uses in Canada
This Class A digital apparatus complies with Canadian ICES-003.
This digital apparatus does not exceed the Class A limits for radio noise emissions from digital apparatus, as set out in the radio interference regulations of the Canadian department of communications.

Pour L'utilisateurs Canadiens
Cet appareil numérique de la Classe A est conforme à la norme NMB-003 du Canada.
Cet appareil numérique ne dépasse pas les limites de carégorie a pour les émissions de bruit radio émanant d'appareils numériques, tel que prévu dans les réglements sur l'interférence radio du départment Canadien des communications.

GENERAL PRECAUTIONS

- Before using this product, be sure to read through this manual. After having read this manual, keep it in a safe, readily accessible place for future reference.
- The information contained herein is subject to change without prior notice.
- Reproduction or transfer of part or all of this document in any means is prohibited without permission from Citizen Systems.
- Note that Citizen Systems is not responsible for any operation results regardless of omissions, errors, or misprints in this manual.
- Note that Citizen Systems is not responsible for any trouble caused as a result of using options or consumables that are not specified in this manual.
- Except explained elsewhere in this manual, do not attempt to service, disassemble, or repair this product.
- Note that Citizen Systems is not responsible for any damage attributable to incorrect operation/handling or improper operating environments that are not specified in this manual.
- Data is basically for temporary use and not stored for an extended period of time or permanently. Please note that Citizen Systems is not responsible for damage or lost profit resulting from the loss of data caused by accidents, repairs, tests or other occurrences.
- If you find omissions, errors, or have questions, please contact your Citizen Systems dealer.
- If you find any pages missing or out of order, contact your Citizen Systems dealer for a replacement.

*TZ30-M01 is the model name printed on the rating plate of the CT-S310II.

CITIZEN is a registered trade mark of Citizen Holdings Co., Japan
CITIZEN es una marca registrada de Citizen Holdings Co., Japón
Company names and product names in this manual are trademarks or registered trademarks of relevant companies.
Copyright© 2011 by CITIZEN SYSTEMS JAPAN CO., LTD.

SAFETY PRECAUTIONS ...WHICH SHOULD BE STRICTLY OBSERVED

Before using this product for the first time, carefully read these SAFETY PRECAUTIONS. Improper handling may result in accidents (fire, electric shock or injury).
In order to prevent injury to operators, third parties, or damage to property, special warning symbols are used in the User's Manual to indicate important items to be strictly observed.

- After having read this Manual, keep it in a safe, readily accessible place for future reference.
- Some of the descriptions contained in this manual may not be relevant to some printer models.

The following describes the degree of hazard and damage that could occur if the printer is improperly operated by ignoring the instructions indicated by the warning symbols.

WARNING

Neglecting precautions indicated by this symbol may result in fatal or serious injury.

CAUTION

Neglecting precautions indicated by this symbol may result in injury or damage to property.

This symbol is used to alert your attention to important items.

This symbol is used to alert you to the danger of electric shock or electrostatic damage.

This symbol denotes a request to unplug the printer from the wall outlet.

This symbol is used to indicate that the power supply must be grounded.

This symbol is used to indicate useful information, such as procedures, instructions or the like.

This symbol is used to indicate prohibited actions.

PRECAUTIONS ON PRINTER INSTALLATION

⚠ WARNING

■ Do not use or store this product in a place where it will be exposed to:
  * Flames or moist air.
  * Direct sunlight.
  * Hot airflow or radiation from a heating device.
  * Salty air or corrosive gases.
  * Ill-ventilated atmosphere.
  * Chemical reactions in a laboratory.
  * Airborne oil, steel particles, or dust.
  * Static electricity or strong magnetic fields.

- **Neglecting these warnings may result in printer failure, overheating, emission of smoke, fire, or electric shock.**

■ Do not drop any foreign object nor spill liquid into the printer. Do not place any object on the printer either.
■ Do not drop any metallic object such as paper clips, pins or screws into the printer.
■ Do not place a flower vase, pot, or anything containing water on the printer.
■ Do not spill coffee, soft drinks, or any other liquid into the printer.
■ Do not spray insecticide or any other chemical liquid over the printer.

- **Dropping a metallic foreign object into the printer, may cause printer failure, fire, or electric shock. Should it occur, immediately turn the printer off, unplug it from the supply outlet, and call your local Citizen Systems dealer.**

Do not handle the printer in the following ways:
■ Do not subject the printer to strong impacts or hard jolts (e.g., being stepped on, dropped or struck).
■ Never attempt to disassemble or modify the printer.

- **Neglecting to handle properly may result in printer failure, overheating, emission of smoke, fire, or electric shock.**

■ Install, use, or store the printer out of the reach of children.

- **Electric appliances could cause an unexpected injury or accident if they are handled or used improperly.**
- **Keep the power cord and signal cables out of the reach of children. Also children should not be allowed to gain access to any internal part of the printer.**
- **The plastic bag the printer came in must be disposed of properly or kept away from children. Wearing it over the head may lead to suffocation.**

⚠ CAUTION

Do not use the printer under the following conditions.

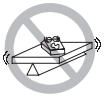

■ Avoid locations subject to vibration or instability.
■ Avoid locations where the printer is not level.
- **The printer may fall and cause an injury.**
- **The quality of printing may deteriorate.**

■ Do not obstruct the printer's air vents.
■ Do not place anything on the printer.
■ Do not cover or wrap the printer in cloth or blankets.
- **Doing so could cause heat to build up and deform the case or start a fire.**

■ Avoid using the printer near a radio or TV set or from supplying it from the same electric outlet as these appliances.
■ Avoid using the printer interconnected with a cable or cord that has no protection against noise. (For interconnections, use shielded or a twisted pair of cables and ferrite cores, or other anti-noise devices.)

■ Avoid using the printer with a device that is a strong source of noise.
- **The printer may have an adverse effect on nearby radio or TV transmissions. There may also be cases when nearby electrical appliances adversely influence the printer, causing data errors or malfunction.**

■ Installed in any orientation other than those specified.
- **Malfunction, failure, or electric shock may result.**

■ Connect the printer to a ground.
- **Electric leakage may cause an electric shock.**

■ Do not connect the printer's ground to any of the following:
  * Gas piping
    - **A gas explosion could result.**
  * Telephone line ground
  * Lightning rod
    - **If lightning strikes a large surge of current may cause fire or shock.**
  * Water pipes
    - **Plastic water pipes should not be used for grounding. (Those approved by a Waterworks Department may be used.)**

■ Before connecting or disconnecting the grounding lead to or from the printer, always unplug it from the electric outlet.

PRECAUTIONS IN HANDLING THE PRINTER

⚠ WARNING

Please observe the following precautions for power source and power cord:

- ■ Do not plug or unplug the power cord with a wet hand.
- ■ Use the printer only at the specified supply voltage and frequency.
- ■ Check to make sure that the supply outlet from which the printer is powered has a sufficient capacity.
- ■ Do not supply the printer from a power strip or current tap shared with other appliances.
- ■ Do not plug the power cord into an electric outlet with dust or debris left on the plug.

- ■ Do not use a deformed or damaged power cord.
- ■ Do not move the printer while its power is on.

- • **Neglecting to handle it properly may result in printer failure, emission of smoke, fire, or electric shock.**
- • **An overload may cause the power cord to overheat, catch fire, or the circuit breaker to trip.**

- ■ Do not allow anything to rest on the power cord. Do not place the printer where the power cord may be stepped on.

- ■ Do not use or carry the printer with its power cord bent, twisted, or pulled.
- ■ Do not attempt to modify the power cord unnecessarily.
- ■ Do not place the power cord near any heating device.

- • **Neglecting these cautions may cause wires or insulation to break, which could result in electric leakage, electric shock, or printer failure. If the power cord sustains damage, contact your Citizen Systems dealer.**
- ■ Do not leave things around the electric outlet.

- ■ Supply power to the printer from a convenient electric outlet, readily accessible in an emergency.
- • **Pull the plug to immediately shut it down in an emergency.**
- ■ Insert the power plug fully into the outlet.

- ■ If the printer will not be used for a long time, disconnect it from its electric outlet.
- ■ Hold the plug and connector when plugging or unplugging the power cord or signal cable after turning off the printer and the appliance connected to it.

⚠ CAUTION

Caution label is attached in the position shown in the following figure. Carefully read the handling precautions before using the printer.

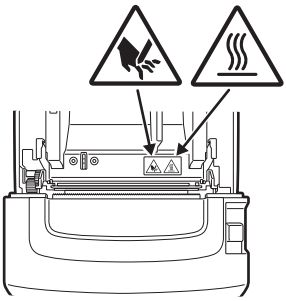

THIS LABEL INDICATES THE RISK OF BURNS DUE TO THE HIGH TEMPERATURE OF THE PRINT HEAD AND A RISK OF BEING CUT BY THE MANUAL AND AUTO CUTTERS WHILE THE PAPER COVER IS OPEN.

■ Do not transport this printer with the paper roll inside.
- **Printer failure or damage may occur.**

To prevent possible malfunction or failure observe the following.

■ Do not open the paper cover during printing.
■ Avoid operating the printer without paper properly loaded.
■ Avoid the use of paper not complying with specifications.
- **May result in poor print quality.**

■ Avoid using torn pieces of paper or paper spliced with plastic adhesive tape.
■ Avoid forcibly pulling already loaded paper by hand.
■ Avoid using a sharp pointed device to operate panel buttons.

■ Be sure to firmly insert the cable plugs into their mating sockets.
- **A cross connection may damage the printer's internal electronics or the host system's hardware.**

■ Only use the printer with devices that have designated solenoid specifications for the cash drawer interface connector.
- **Neglecting this caution may result in malfunction or failure.**

⚠ CAUTION

To prevent injury and printer failures from worsening, observe the following:

- While the paper cover is open, be careful to not touch the manual cutter that is in the paper eject slot.
- Do not touch the printing surface of the thermal head.
- Do not touch any of the moving parts (e.g., paper cutter, gears, active electric parts) while the printer is working.
- In case of trouble do not attempt to repair the printer. Ask Citizen Systems service for repair.
- Be careful that the covers do not pinch your hands or fingers.
- Be careful of the sharp edges on the printer. Do not allow them to injure you or damage property.

- **May result in electric shock, burn, or injury.**

If the printer emits smoke, an odd smell, or unusual noise while printing, immediately abort the current print session and unplug the printer from the electric outlet.

ⓘ DAILY MAINTENANCE

Observe the following precautions for daily maintenance.

- When cleaning the printer, always turn it off and unplug it from the electric outlet.
- Use a soft, dry cloth for cleaning the surface of the printer case.
  For severe stains, use a soft cloth slightly dampened with water.
  Never use organic cleaning solvent such as alcohol, paint thinner, trichloroethylene, benzene, or ketone. Never use a chemically processed cleaning cloth.

- To remove paper dust, use a soft brush.

⚠ CAUTION

- **The thermal head is at a dangerously high temperature immediately after printing. Allow it to cool off before starting maintenance work.**

THE TABLE OF CONTENTS

1. GENERAL OUTLINE 9
1.1 Features 9
1.2 Unpacking 10
1.3 Model Classification 10
1.4 Basic Specifications 11

2. EXPLANATION OF PRINTER PARTS 12
2.1 Printer Appearance 12
2.2 Inside the Paper Cover 15
2.3 Other Built-in Functions 16

3. SETUP 18
3.1 Connecting the AC Power Cord 18
3.2 Connecting Interface Cables 19
3.3 Connecting the Cash Drawer 20
3.4 Precautions for Installing the Printer 22
3.5 Partition for 58-mm Wide Paper Roll 23
3.6 Long Life Print (LLP) Function Settings 24
3.7 Loading Paper 25
3.8 Attaching the Power Switch Cover 26
3.9 Installing the Driver and Utilities 26

4. MAINTENANCE AND TROUBLESHOOTING 27
4.1 Periodic Cleaning 27
4.2 Clearing a Cutter Lock (1) 28
4.3 Clearing a Cutter Lock (2) 29
4.4 Self-printing 30
4.5 Hexadecimal Dump Printing 31
4.6 Error Messages 32
4.7 Operating Precautions for Serial Interface 33

5. OTHER 34
5.1 External Views and Dimensions 34
5.2 Printing Paper 35
5.3 Manual Setting of Memory Switches 36

1. GENERAL OUTLINE

The CT-S310II line thermal printer series is designed for use with a broad array of terminal equipment including data, POS, and kitchen terminals.
These printers have extensive features so they can be used in a wide range of applications.

1.1 Features

- High-speed (160 mm/s) printing
- Compact design (maximum 83-mm paper roll size)
- Built-in power supply eliminates worries about complicated cables
- Can use 80-mm or 58-mm wide paper roll
- Equipped with Long Life Print (LLP) function for extended head life
- Equipped with a fast and quiet cutter
- Easy to clear cutter jams
- Printer status and errors indicated by LED and a buzzer
- Dual interface (USB, serial)
- Built-in cash drawer kick-out interface
- Two types of energy saving functions (ENERGY STAR compliant)
- Three types of paper save settings
- Barcode and 2D barcode printing supported including GS1-DataBar
- Store user-defined characters and logos on user memory
- Memory switches make customization possible
- Driver and utility software included
- All-in-one package lets you get started right away

1.2 Unpacking

Make sure the following items are included with your printer.

- Printer: 1
- AC power cord: 1
- Power switch cover: 1
- USB cable*: 1
- Sample paper roll: 1 roll
- CD-ROM: 1
- Quick Start Guide: 1
- Rubber feet: 4
- Partition: 1
- Wall-mounting bracket kit: 1

Note:
*: USB interface types only
In designated markets

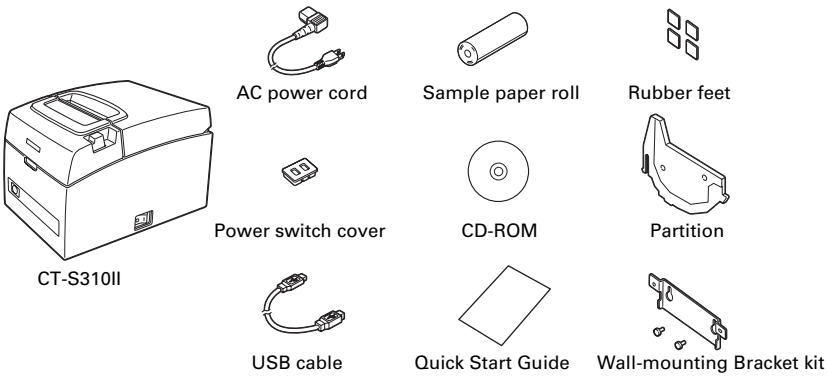

1.3 Model Classification

Model numbers indicate printer features according to the following classification system.

CT - S310II - E - BK

Market
E: Europe
U: North America
C: China
A: Australia

Body case color
WH: Cool white
BK: Black

1.4 Basic Specifications

Item	Specifications			
Model	CT-S310II			
Print method	Line thermal dot print method			
Print width *1	72 mm/576 dots, 64 mm/512 dots, 52.5 mm/420 dots, 48 mm/384 dots, 45 mm/360 dots, 48.75 mm/390 dots, 68.25 mm/546 dots			
Dot density	8 × 8 dots/mm (203 dpi)			
Print speed	160 mm/s (fastest, print density 100%), 1280 dot-lines/s			
Number of print columns *2	—	Maximum number of characters (columns)		Dot configuration (dots)
	Paper width / Font	80 mm	58 mm	
	Font A	48	35	12 × 24
	Font B	64	46	9 × 24
	Font C	72	52	8 × 16
Character size*3	Font A: 1.50 × 3.00 mm Font B: 1.13 × 3.00 mm Font C: 1.00 × 2.00 mm			
Character type	Alphanumeric, international, PC437/850/852/857/858/860/863/864/865/866/ WPC1252/katakana/Thai code 18			
User memory	384 KB (capable of storing user-defined characters and logos)			
Bar code types	UPC-A/E, JAN (EAN) 13/8 columns, ITF, CODE39, CODE128, CODABAR (NW-7), CODE93, PDF417, QR Code, GS1-DataBar			
Line spacing	4.25 mm (1/6 inch) (changeable using commands)			
Paper roll	Paper roll: 80^{+0}_{-1} mm/58^{+0}_{-1} mm × maximum ϕ83 mm Paper thickness: 65-75 μm (core tube diameter: inner 12 mm/outer 18 mm) 75-85 μm (core tube diameter: inner 25.4 mm/outer 32 mm)			
Interface	USB, Serial (RS-232C compliant)			
Cash drawer kick-out	Supports 2 cash drawers			
Buffer size	4 k bytes/45 bytes			
Power consumption	Approximately 32 W (normal printing), 0.6 W (power save mode), 0.18 W (USB power save mode)			
Power source	Rated input: AC 100 to 240 V, 50/60 Hz, 150 VA			
Weight	Approx. 1.8 kg			
Outside dimensions	140 (W) × 195 (D) × 132 (H) mm			
Operating temperature and humidity	5 to 45°C, 10 to 90% RH (no condensation)			
Storage temperature and humidity	-20 to 60°C, 10 to 90% RH (no condensation)			
Reliability	Print head life: 150 km, 300 million pulses (at normal temperature/humidity, using recommended paper and paper thickness) Auto cutter life: 2 million cuts (at normal temperature/humidity, using recommended paper and paper thickness)			
Safety standard	UL, C-UL, FCC Class A, TÜV-Bauart, CE Marking			

Notes:
*1: When paper width is 80 or 58 mm.
*2: The number of printable columns is selected using a memory switch.
The numbers of columns noted in this table refer to typical models. The number of columns varies depending on specifications.
*3: Characters appear small because the dimensions include a blank area surrounding each character.

2. EXPLANATION OF PRINTER PARTS

2.1 Printer Appearance

Names of parts

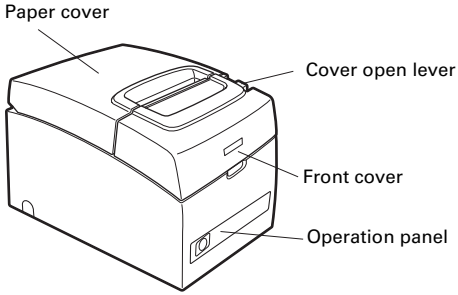

(Front view)

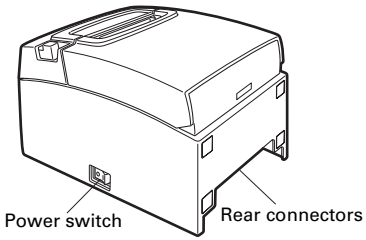

(Rear view)

- Paper cover
  Open to load paper.

- Cover open lever
  Use this lever to open the paper cover.

- Front cover
  Open and close this cover to clear a cutter lock.

Refer to 4.3 Clearing a Cutter Lock (2)

- Power switch
  Press this switch to turn the power on or off.

Operation panel

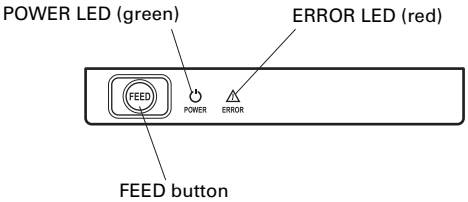

- POWER LED (green)
  Lights when the power is on, turns off when the power is off.
  Flashes when data is incoming or a memory error has occurred.
  The light dims when entering the energy saving mode and brightness slowly changes.

- ERROR LED (red)
  Flashes if the print head is hot, the paper cover is open, a cutter lock occurs, and so forth.

- FEED button
  Press this button to feed paper.
  In case of a cutter lock, remove the cause of the lock, close the paper cover, and then press the FEED button.
  The printer enters the mode for setting memory switches and running self-printing.

Refer to 4.4 Self-printing

Refer to 4.6 Error Messages

Refer to 5.3 Manual Setting of Memory Switches

Rear connectors

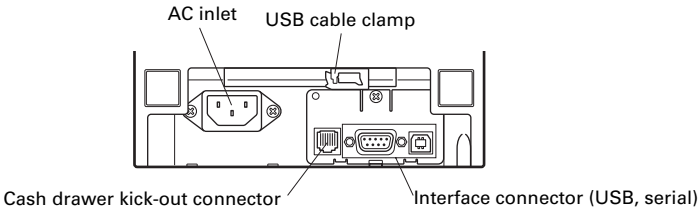

- Interface connector (USB, serial)
  Connects to the interface cable (USB, serial).

- Cash drawer kick-out connector
  Connects to the cable from the cash drawer.

- AC inlet
  Connects to the AC power cord.

- USB cable clamp
  Fixes the USB cable in place to prevent it from being pulled out.

2.2 Inside the Paper Cover

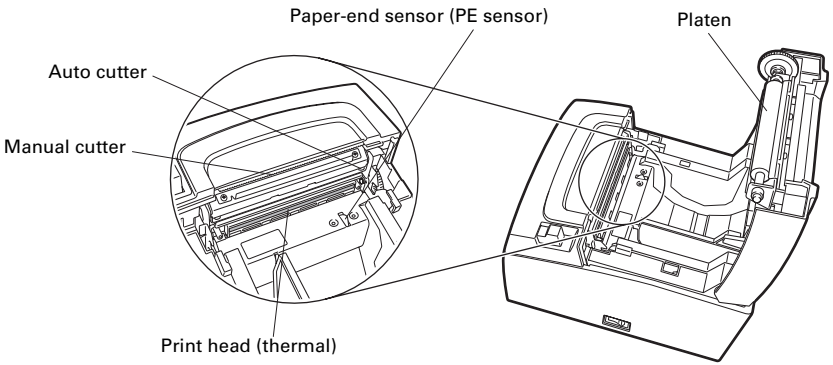

- Platen
  Feeds the paper.

- Manual cutter
  For cutting the paper manually.

- Auto cutter
  For cutting the paper automatically.

Refer to 5.3 Manual Setting of Memory Switches

- Print head (thermal)
  Prints characters and graphic data on paper (paper rolls).

- Paper end sensor (PE sensor)
  Detects when there is no paper. Printing stops when this sensor detects there is no paper.

2.3 Other Built-in Functions

- Buzzer
  Buzzes when errors occur or when operations or command operations are performed.

Refer to 4.6 Error Messages

- User memory
  You can save user-defined logo and character data in this memory. Data remains stored in this memory even if the printer is turned off. For information on how to save data, refer to the Command Reference.

- Memory switch
  Setting of various kinds of functions can be stored in memory. Settings remain stored in the memory even if the printer is turned off.

- Power saving functions
  - Power save mode
    Enters power save mode to reduce energy consumption a set period after printing stops.
    Exits power save mode when the FEED key is pressed or print data is received.
    In power save mode the brightness of the POWER LED repeatedly changes slowly.

  - USB power save mode (if memory switch MSW6-3 is set to enabled)
    The printer enters power save mode when the computer is turned off.
    When the PC is turned on the printer exits this mode.
    The POWER LED dims in the USB power save mode.

CAUTION

- If the power is turned off in the USB power save mode, the printer does not exit the mode immediately after the power is turned on. The mode clears about one and a half minutes after the power is turned off.
- The printer enters this mode even if there is an error.
- The printer does not enter this mode during serial interface transmission.

- Paper saving functions
  You can set the following functions to save paper by setting the MSW8-3 to 8-5 memory switches.

  - Delete top margin
    The printer back feeds when printing starts to eliminate the top margin from the paper.
    Set the amount of back feed.

  - Line gap reduction
    The distance between lines at line feed is automatically reduced. Select the percent of reduction.

  - Text reduction Vertical/horizontal
    Size is reduced.
    Set a combination of reduction ratios vertically and horizontally.

⚠ CAUTION

■ If the "Delete top margin" function is used the partially cut printouts must be removed after printing. If the partially cut paper is back fed it may jam and cause trouble.
■ The following precautions are needed for "Text reduction mode".
- Text that is reduced in size is harder to read than regular text.
- With horizontal reduction the print range is also reduced, so the number of lines does not change. You must be careful of the print range when using narrow paper.
- Barcodes cannot be used. It may not be possible to read barcodes if they are printed.

3. SETUP

3.1 Connecting the AC Power Cord

1. **Turn off the power.**
2. **Connect the AC power cord to the AC inlet, and insert the plug into an electric outlet.**

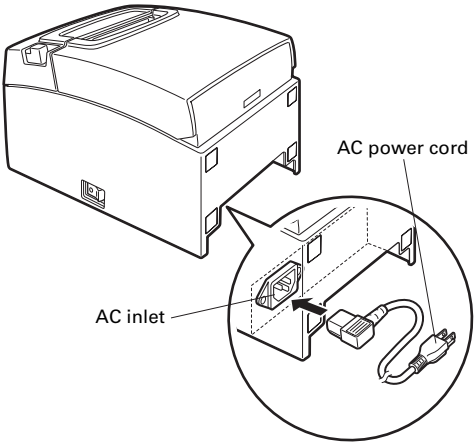

⚠ CAUTION

- Use an AC power source that does not also supply power to equipment that generates electromagnetic noise.
- Pulling on the AC power cord may damage it, cause a fire, electric shock, or break a wire.
- Make sure that the AC power cord is fully inserted so it does not pull out during use.
- If a lightning storm is approaching, unplug the AC power cord from the electric outlet. A lightning strike may cause a fire or electric shock.
- Keep the AC power cord away from heat generating appliances. The insulation on the AC power cord may melt and cause a fire or electric shock.
- If the printer is not going to be used for a long time, unplug the AC power cord from the electric outlet.
- Place the AC power cord so that people do not trip on it.

3.2 Connecting Interface Cables

1. **Turn off the power.**
2. **Orient the interface cable correctly and insert it into the interface connector.**

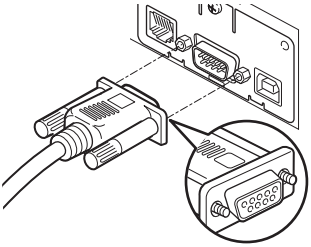

Serial interface

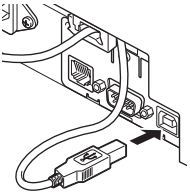

USB interface

⚠ CAUTION

- When disconnecting the cable, always hold the connector.
- Be careful not to insert the USB interface cable into the cash drawer kick-out connector.
- To connect more than one printer to a single computer via a USB interface you must change the serial number of the USB interface.

Use a serial interface cable with the connection layout shown below.

9-pin (female) - 9-pin (female) cable

PC		Printer	
Signal	**Pin**	**Pin**	**Signal**
RXD	2	2	RXD
TXD	3	3	TXD
DTR	4	4	DTR
SG	5	5	SG
DSR	6	6	DSR
RTS	7	7	RTS
CTS	8	8	CTS

⚠ CAUTION

Place the interface cable so people do not trip on it.

3.3 Connecting the Cash Drawer

1. **Turn off the power.**
2. **Confirm the orientation of the cash drawer kick-out cable connector and connect it to the cash drawer kick-out connector at the back of the printer.**
3. **Remove the screw for the ground wire.**
4. **Screw the cash drawer's ground wire to the body of the printer.**

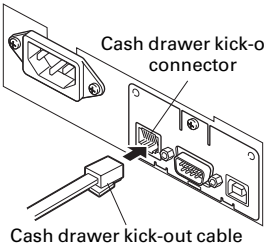

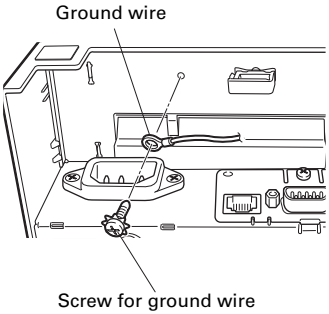

⚠ CAUTION

- Connect only the cash drawer kick-out cable connector to the cash drawer kick-out connector. (Do not connect a telephone line.)
- Signals cannot be output from the cash drawer kick-out connector while printing.
- Hold the connector of the drawer kick cable perpendicular and straight when connecting or disconnecting it. Doing it at an angle may cause the connector to misconnect.

(1) Connector pin configuration

No.	Signal	Function
1	FG	Frame ground
2	DRAWER1	Cash drawer 1 drive signal
3	DRSW	Cash drawer switch input
4	VDR	Cash drawer drive power supply
5	DRAWER2	Cash drawer 2 drive signal
6	GND	Signal ground (common ground on circuits)

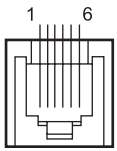

Connector used:
TM5RJ3-66 (Hirose) or equivalent
Applicable connector:
TM3P-66P (Hirose) or equivalent

(2) Electric characteristics
1) Drive voltage: 24 VDC
2) Drive current: Approx. 1 A max. (not to exceed 510 ms.)
3) DRSW signal: Signal levels: “L” = 0 to 0.8 V, “H” = 2 to 3.3 V

(3) DRSW signal
DRSW signal status can be tested with the DLE+EOT, GS+a, or GS+r command.

(4) Drive circuit

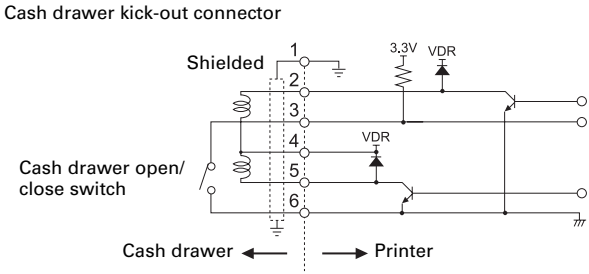

⚠ CAUTION

- Cash drawers 1 and 2 cannot be operated at the same time.
- The solenoid used for the cash drawer should be 24 Ω or more. Do not allow the electric current to exceed 1 A. Excessive current could damage or burn out the circuits.

3.4 Precautions for Installing the Printer

The printer can be used horizontally, vertically, or installed on a wall.

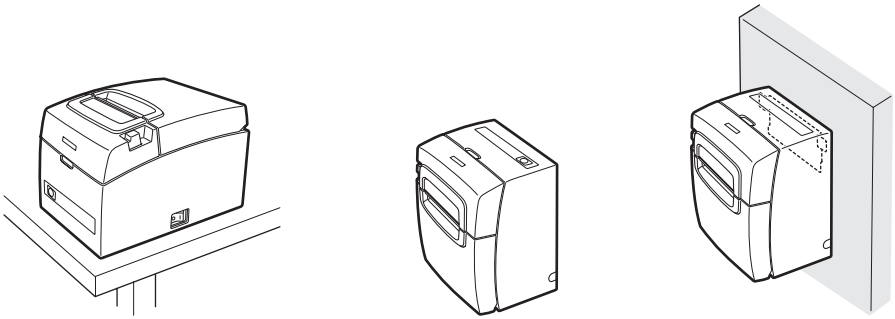

Horizontal position　　Vertical position　　Wall installation

⚠ CAUTION

Do not use the printer under the following conditions.
■ Locations subject to vibration or instability.
■ Locations that are very dirty or dusty.
■ Locations where the printer is not level.
- **The printer may fall and cause an injury.**
- **The quality of printing may deteriorate.**

■ Oriented other than as specified.
- **The printer may malfunction, be damaged, or cause an electric shock.**

Precautions for horizontal installations
■ Do not set cutting to full cut. Doing so may cause cutter jams.

Vertical installation

Use the rubber feet provided when using the printer in a vertical installation. Attach the rubber feet to the four square indentations on the back of the printer.

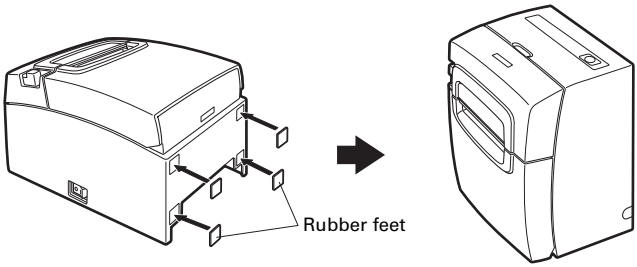

Wall installation

Request a service person to install the printer on a wall. See the manual for whichever option for more details.

3.5 Partition for 58-mm Wide Paper Roll

1. **Turn off the power.**
2. **Pull the cover open lever forward and open the paper cover.**
3. **Set the partition provided in a slot that matches the size of the paper roll you are using. However, to use an 80 mm wide paper roll, remove the partition.**
4. **See "5.3 Manual Setting of Memory Switches" to change the width of the print area.**

Refer to 5.3 Manual Setting of Memory Switches

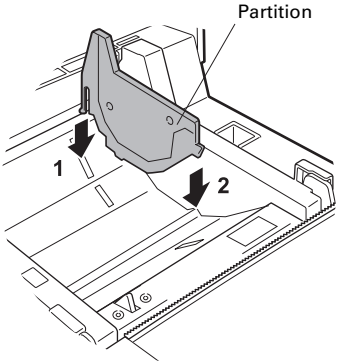

3.6 Long Life Print (LLP) Function Settings

The service life of the print head was increased by reducing the pressure that it contacts the paper.
Long Life Print (LLP) is enabled by changing the positions of the lever switches inside the paper cover.

1. **Turn off the power.**
2. **Pull the cover open lever forward and open the paper cover.**
3. **Use a screwdriver or other pointed object to press the lever switches on both sides in the direction of the A arrows and lower them in the direction the B arrows.**
   Lower the lever switches on the left and right sides one at a time from the standard to the LLP position.
4. **Close the paper cover until you hear a click so it is secure.**

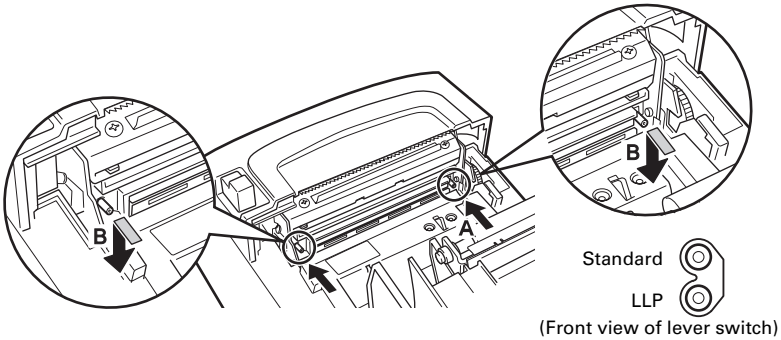

CAUTION

- Be careful not to touch the opening for the auto cutter while the paper cover is open.
- The print head is hot immediately after printing. Do not touch it.
- Do not touch the print head with bare hands or metal objects.
- Both the right and left side lever switches must be set in the same position.
- The printout may be lighter when this setting is enabled. If necessary, increase the print density or use a paper that has good color development.

3.7 Loading Paper

1. **Turn on the power.**
2. **Pull the cover open lever forward and open the paper cover.**
3. **Load the paper roll so that the printable side of the paper is facing down, as shown by arrow A.**
4. **Pull a few cm of paper straight out in the direction of arrow B.**
5. **Close the paper cover until you hear a click. Paper is fed and cut automatically (by the factory setting).**

Refer to 5.3 Manual Setting of Memory Switches

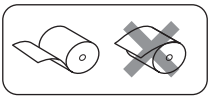

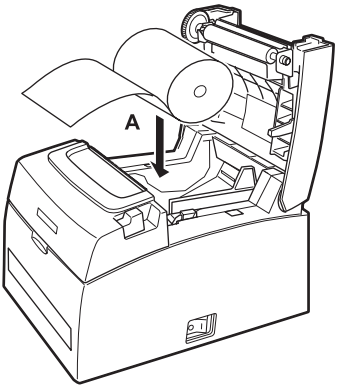

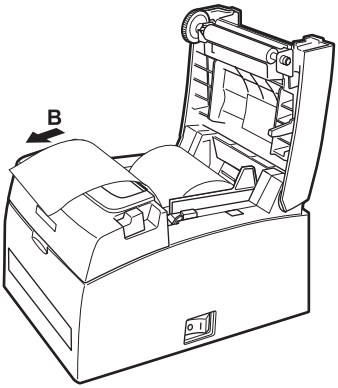

CAUTION

- Always use the specified types of paper rolls.
- Confirm that the paper roll is set correctly.
- If the paper is skewed and not coming straight out of the paper cover, open it and straighten the paper.
- Always pull a few cm of paper straight out of the printer if you open the paper cover while paper is loaded.
- Press on the center of the paper cover to close it securely.
- Be careful of paper cuts while loading the paper.
- Do not touch the print head, manual cutter, or auto cutter while the paper cover is open. Doing so may cause a burn or cut.
- Pull the paper in the direction of the B arrow when cutting paper manually.
- Do not open the paper cover during printing.

3.8 Attaching the Power Switch Cover

Attach this cover to prevent the power switch from being used.

1. Press the power switch cover onto the power switch compartment until it clicks.

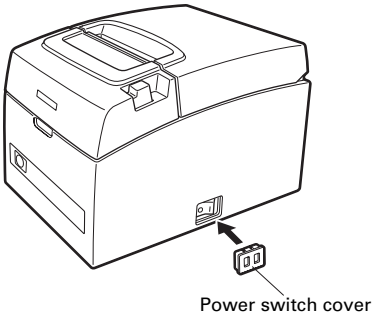

Put a screwdriver or other pointed object into the grooves on the power switch cover to remove it.

3.9 Installing the Driver and Utilities

The driver and utilities are on the CD-ROM provided in the package.
Install them if necessary.
The explanation for the driver's installation, functions, and usage are on the CD-ROM.

It is also possible to download the latest files from the sites below.
http://www.citizen-systems.co.jp/english/support/download/printer/driver/

4. MAINTENANCE AND TROUBLESHOOTING

4.1 Periodic Cleaning

A dirty print head or platen may reduce printing quality or cause malfunctions. We recommend cleaning the printer periodically (every 2 to 3 months) as shown below.

1. **Turn off the power.**
2. **Pull the cover open lever forward and open the paper cover.**
3. **Wait a few minutes until the print head cools.**
4. **Use a cotton swab dampened with ethyl alcohol to wipe off any dirt and dust that is on the print head and platen.**

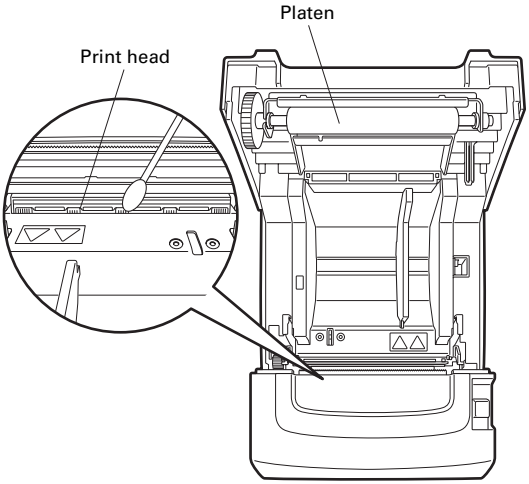

⚠ CAUTION

- The print head is hot immediately after printing. Do not touch it.
- Do not touch the print head with bare hands or metal objects.

4.2 Clearing a Cutter Lock (1)

The ERROR LED flashes and the auto cutter blade remains extended because a foreign object or paper jam is obstructing it.

If the ERROR LED is flashing, clear the locked cutter as shown below.

1. **Turn on the power.**
2. **Pull the cover open lever forward and open the paper cover.**
3. **Remove any jammed paper including any scraps of paper. (Remove the paper roll that is loaded in the holder also.)**
4. **Reload the paper roll and close the paper cover.**

CAUTION

- The print head is hot immediately after printing. Do not touch it.
- Do not touch the print head with bare hands or metal objects.

After doing the procedure in “Clearing a Cutter Lock (1)” and then opening the paper cover, if the blade of the auto cutter is extended, do the procedure in “Clearing a Cutter Lock (2)”.

Refer to 4.3 Clearing a Cutter Lock (2)

4.3 Clearing a Cutter Lock (2)

The paper cover is designed to be opened if the cutter locks by pressing the cover open lever. If the blade of the auto cutter still remains extended, use the following procedure to clear the locked cutter.

1. **Turn off the power.**
2. **Open the front cover in the direction of the A arrow.**
3. **Lift the protective sheet and turn the cutter gear in the direction of arrow B to return the auto cutter to a position where the paper cover can be opened.**
   Turn the cutter gear until the auto cutter blade retracts in the direction of arrow C. If the blade of the auto cutter does not move when you turn the cutter gear in the direction of arrow B, turn it in the other direction.
4. **Pull the cover open lever forward and open the paper cover.**
5. **Remove whatever caused the cutter to lock.**
6. **Close the front cover.**
7. **Load a paper roll and close the paper cover.**
8. **Turn on the power.**
   Check that the POWER LED lights.

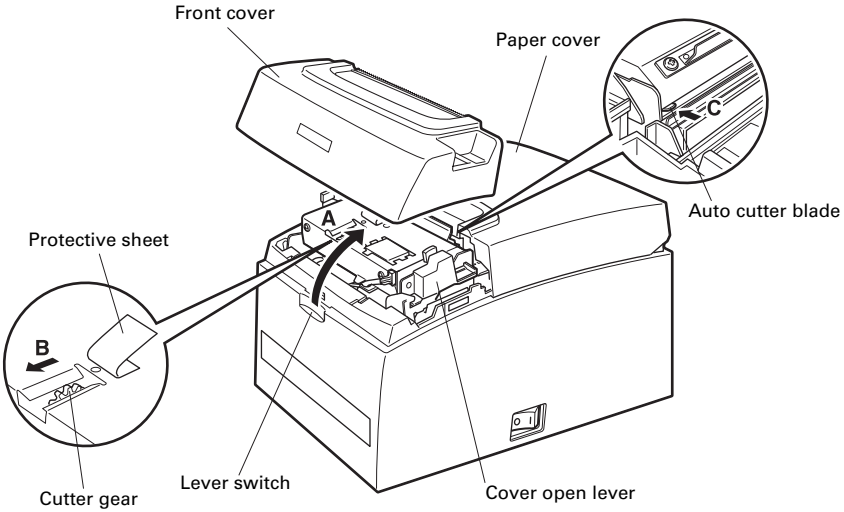

CAUTION

- Be sure to turn off the power.
- Be careful not to touch the manual cutter while the front cover is open.
- Be careful not to touch the opening for the auto cutter while the paper cover is open.
- The print head is hot immediately after printing. Do not touch it.
- Do not touch the print head with bare hands or metal objects.
- If the above procedure does not retract the auto cutter, contact your Citizen Systems dealer.

4.4 Self-printing

While paper is loaded, press and hold the FEED button while turning the power on. Hold the FEED button down for about one second and then release it to start self-printing. The printer prints its model name, version, memory switch settings, and a list of built-in fonts.

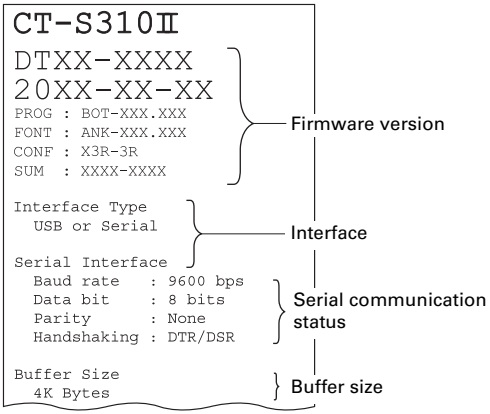

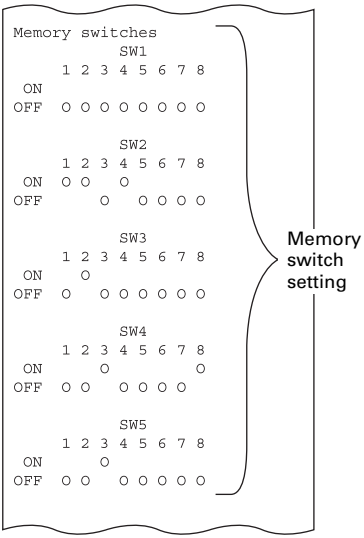

4.5 Hexadecimal Dump Printing

Print received data in hexadecimal. If problems such as missing or duplicated data occur, this function allows you to check whether or not the printer is receiving data correctly.

How to do hexadecimal dump printing

1. **Load paper.**
2. **While the paper cover is open, press and hold the FEED button while turning the power on, and then close the paper cover.**
3. **The printer prints "HEX dump print mode" followed by the received data printed in hexadecimal numbers and some characters.**

How to stop hexadecimal dump printing

Do one of the following to stop printing.

- Press the FEED button three times in a row
- Turn off the power
- Receive a reset command from an interface

CAUTION

- The printer prints "." if there is no character corresponding to the data.
- None of the commands function during hexadecimal dump printing.
- If print data does not cover a complete line, press the FEED button to advance the paper.

Print example
HEX dump print mode

```
61 62 63 64 65 66 67 0A 0D 0D 0D 0D abcdefg.....
0D 0D 0D                                .....
```

4.6 Error Messages

- Paper-end
  When the end of the roll of paper is detected, the ERROR LED lights. Load a new paper roll.

- Paper cover open
  When the paper cover is open, the ERROR LED lights. If the paper cover is opened during printing, the ERROR LED flashes. Check the paper and always pull a few cm of paper straight out of the printer before closing the paper cover. Printing resumes. Sending a command to resume printing may be required depending on the memory switch setting.

- Cutter locked
  If the auto cutter cannot move because of a paper jam or something else, the ERROR LED flashes. Remove the cause of the trouble and press the FEED button. If the auto cutter still does not operate and the paper cover does not open, refer to “4.3 Clearing a Cutter Lock (2)”.

Refer to 4.3 Clearing a Cutter Lock (2)

- Print head hot
  When you print dense characters, dark images, or for an extended time in a hot environment, the print head temperature increases. If the print head exceeds a specified temperature, the printer stops printing and waits for the print head to cool. When this happens, the ERROR LED flashes. Printing resumes automatically when the print head cools.

The status display for various messages is shown below.

Status	POWER LED (green)	ERROR LED (red)	Buzzer*3
Paper-end	Lights	Lights	Yes
Paper cover open or front cover open*1	Lights	Lights	No
Paper cover open or front cover open*2	Lights		Yes
Cutter locked	Lights		Yes
Memory error		–	Yes
Print head hot	Lights		Yes
Low-voltage error	Lights		Yes
High-voltage error	Lights		Yes
Waiting for macro to execute	Lights		–
Power Save Mode		–	–

Notes:
*1: If the paper cover or front cover is open in standby.
*2: If the paper cover or front cover is open when printing or feeding paper.
*3: Buzzer sounds when MSW5-1 (buzzer setting) is set to ON. However, the conditions under which the buzzer sounds vary depending on the settings of MSW6-1 and MSW10-6.

4.7 Operating Precautions for Serial Interface

White stripes may appear in the printout or the paper may not feed, depending on the printing conditions, when using a serial interface. To prevent this, change the memory switch settings shown as below.

1. **Increase the transmission speed of the MSW7-1 (serial port).**
2. **Lower the MSW10-2 (print speed) level.**

⚠ CAUTION

The transmission speed of the serial interface, ambient temperature, print data duty, and other printing conditions may cause these problems even after doing the above settings.

5. OTHER

5.1 External Views and Dimensions

(Unit: mm)

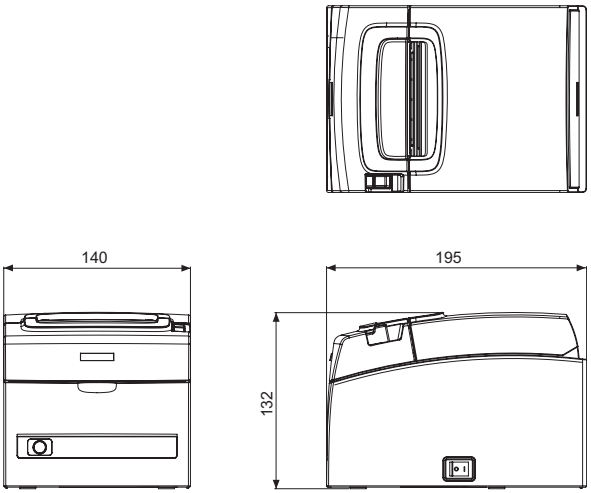

5.2 Printing Paper

Use the paper shown in the following table or paper of the same quality.

Paper type	Product name
Recommended thermal roll paper	TF50KS-E2D, TF50KS-E or TF60KS-E from Nippon Paper PD150R or PD160R from Ohji Paper PA220AG, HP220A, HP220AB-1, F230AA or P220AB from Mitsubishi Paper

(Unit: mm)

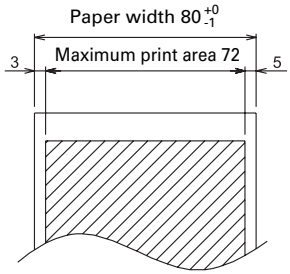

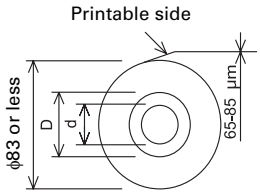

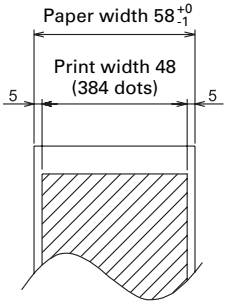

Paper thickness (µm)	65-75	75-85
Core inner diameter d (mm)	ϕ12	ϕ25.4
Core outer diameter D (mm)	ϕ18	ϕ32

⚠ CAUTION

Use thermal paper that is wound as follows:
- ■ Not creased and fits tight to the core.
- ■ Not folded.
- ■ Not glued to the core.
- ■ Rolled with the printable side out.

5.3 Manual Setting of Memory Switches

Memory switches are used to set various printer settings. The memory switches can be set manually (set by hand on the printer) or by commands. This section explains how to perform manual settings.
For information on how to set the memory switches using commands, please refer to the Command Reference.

Quick setting mode

The settings for the memory switches for a replacement printer's manufacturer, model, paper width, and character spacing can be set at the same time to the optimum settings.
Do the settings while confirming the selected items on the printout.

1. **Load paper.**
2. **While the paper cover is open, press and hold the FEED button while turning the power on.**
3. **Press the FEED button three times and close the paper cover.**
   The printer enters memory switch quick setting mode.
   The selectable item "Model" and the selection are printed.

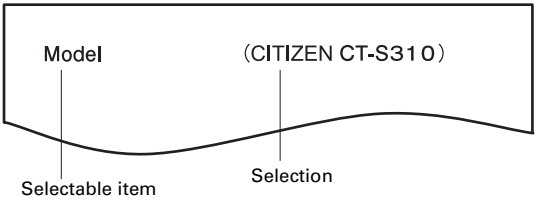

4. **Press the FEED button.**
   A selection is printed in order through the cycle each time the FEED button is pressed.
   Press the FEED button until the selection you want is printed.
5. **Press the FEED button for at least two seconds.**
   The selection is set.
   If there is another selectable item, it and the selection are printed.
6. **Repeat steps 4 and 5 to select and set the printer's model, paper width, character spacing.**
   When all the items are set, "Save To Memory" is printed.
7. **Press the FEED button for at least two seconds.**
   The changed memory switch settings are saved and a list of them is printed.
   The printer exits quick setting mode when printing is finished.

Selected item				Automatic memory switch settings			
Model	**Paper width**	**Character space**		**MSW2-4 Full Col Print**	**MSW3-7 CBM1000 Mode**	**MSW8-1 Print Width**	**MSW6-2 Character Space**
CITIZEN CT-S310	58 mm	—		WaitData	Invalid	384 dots	—
	80 mm	—		WaitData	Invalid	576 dots	—
EPSON T88*	58 mm	Invalid		WaitData	Invalid	360 dots	0 dot
		Valid		WaitData	Invalid	390 dots	1 dot
	80 mm	Invalid		WaitData	Invalid	512 dots	0 dot
		Valid		WaitData	Invalid	546 dots	1 dot
EPSON 203dpi*	58 mm	—		WaitData	Invalid	420 dots	—
	80 mm	—		WaitData	Invalid	576 dots	0 dot

Note:
*: EPSON is a registered trademark of Seiko Epson Corporation.

Individual setting mode

Set the memory switches individually.
Do the settings while confirming the memory switch function and settings on the printout.

1. **Load paper.**
2. **While the paper cover is open, press and hold the FEED button while turning the power on.**
3. **Press the FEED button twice and close the paper cover.**
   The printer enters the mode for setting memory switches individually.
   The printer prints "Memory SW (1)" and the current setting, 0 (off) or 1 (on).
   (The current settings for memory switches 7 to 10 are not printed.)

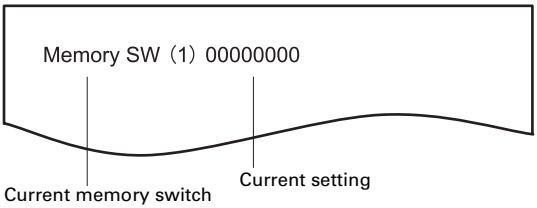

4. **Press the FEED button.**
   The list of memory switches cycles through in order from "Memory SW (1)" → "Memory SW (2)" → ... "Memory SW (10)" → "Save To Memory" → "Memory SW (1)" → each time the FEED button is pressed.
   Press the FEED button until the number for the memory switch you want to change is printed.

5. **Press the FEED button for at least two seconds.**
   A setting for the memory switch is printed, through the cycle, each time the FEED button is pressed for at least two seconds.
   Press the FEED button for at least two seconds to cycle through the list until the function of the memory switch you want to change is printed.

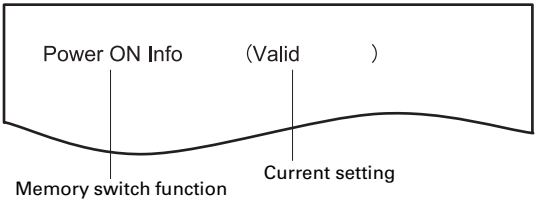

6. **Press the FEED button.**
   A setting is printed each time the FEED button is pressed in order through the cycle.
   When the current settings are printed, the ERROR LED lights.
   Press the FEED button until the setting you want is printed.
7. **Press the FEED button for at least two seconds.**
   The selected settings are set.
   The next memory switch function and settings are printed.
8. **Repeat steps 5 to 7 to change different functions for the current memory switch number.**
9. **Open the paper cover and close it.**
   The changed memory switch settings are printed.
10. **Repeat steps 4 to 9 to change functions for a different memory switch number.**
11. **Press the FEED button until "Save To Memory" is printed.**
12. **Press the FEED button for at least two seconds.**
    The changed memory switch settings are saved and a list of them is printed.
    The printer exits individual setting mode when printing is finished.

Memory switch initialization

Set all the memory switches to the factory settings.

1. **Do steps 1 through 3 of the procedure to enter individual setting mode.**
2. **Press the FEED button until "Save To Memory" is printed.**
3. **Open the paper cover.**
4. **Press the FEED button for at least two seconds.**
   All memory switches change to the factory settings.
5. **Close the paper cover.**

The function of each memory switch is shown in the following table. (Shaded values are factory settings.)

Switch no.	Function	OFF	ON
MSW1-1	Power ON Info	**Valid**	Not Send
MSW1-2	Buffer Size	**4K bytes**	45 bytes
MSW1-3	Busy Condition	**Full/Err**	Full
MSW1-4	Receive Error	**Print"?"**	No Print
MSW1-5	CR Mode	**Ignored**	LF
MSW1-6	Reserved	**Fixed**	—
MSW1-7	DSR Signal	**Invalid**	Valid
MSW1-8	Reserved	**Fixed**	—
MSW2-1	Reserved	—	**Fixed**
MSW2-2	Auto Cutter	Invalid	**Valid**
*1 MSW2-3	Spool Print	**Invalid**	Valid
MSW2-4	Full Col Print	LineFeed	**WaitData**
MSW2-5	Resume aft PE	**Next**	Top
MSW2-6	Reserved	**Fixed**	—
MSW2-7	Reserved	**Fixed**	—
MSW2-8	Reserved	**Fixed**	—
MSW3-1	Resume Cttr Err	**Valid**	Invalid
MSW3-2	Reserved	—	**Fixed**
MSW3-3	Reserved	**Fixed**	—
MSW3-4	Reserved	**Fixed**	—
MSW3-5	Reserved	**Fixed**	—
MSW3-6	Reserved	**Fixed**	—
MSW3-7	CBM1000 Mode	**Invalid**	Valid
MSW3-8	Resume Open Err	**Close**	Command
MSW4-1	Reserved	**Fixed**	—
MSW4-2	Reserved	**Fixed**	—
MSW4-3	Feed&Cut at TOF	Invalid	**Valid**
MSW4-4	Reserved	**Fixed**	—
MSW4-5	Reserved	**Fixed**	—
MSW4-6	Reserved	**Fixed**	—
MSW4-7	Reserved	**Fixed**	—
MSW4-8	Partial Only	Invalid	**Valid**
MSW5-1	Buzzer	**Valid**	Invalid
MSW5-2	Line Pitch	**1/360**	1/406
MSW5-3	USB Mode	Virtual COM	**Printer Class**
MSW5-4	Reserved	**Fixed**	—
MSW5-5	Reserved	**Fixed**	—
MSW5-6	Reserved	**Fixed**	—
MSW5-7	Reserved	**Fixed**	—
MSW5-8	Reserved	**Fixed**	—
MSW6-1	Act. For Driver	**Invalid**	Valid
MSW6-2	Character Space	**Invalid**	Valid
MSW6-3	USB Power Save Mode	Invalid	**Valid**
MSW6-6	Reserved	**Fixed**	—
MSW6-7	Reserved	**Fixed**	—
MSW6-8	Reserved	**Fixed**	—

Switch no.	Function	Initial setting	Setting value
MSW7-1	Baud Rate	9600 bps	1200 bps, 2400 bps, 4800 bps, 9600 bps, 19200 bps, 38400 bps, 57600 bps, 115200 bps
MSW7-2	Data Length	8bits	7bits, 8bits
MSW7-3	Stop Bit	1bit	1bit, 2bits
MSW7-4	Parity	NONE	NONE, EVEN, ODD
MSW7-5	Flow Control	DTR/DSR	DTR/DSR, XON/XOFF
MSW7-6	DMA Control	Valid	Invalid, Valid
MSW7-7	VCom Protocol	PC Setting	PC Setting, DTR/DSR, XON/XOFF
MSW8-1	Print Width	576 dots	360 dots, 384 dots, 420 dots, 512 dots, 576 dots, 390 dots, 546 dots
MSW8-2	Reserved		
MSW8-3	Top Margin	11 mm	11 mm, 3 mm, 4 mm, 5 mm, 6 mm, 7 mm, 8 mm, 9 mm, 10 mm
MSW8-4	Line Gap Reduction	Invalid	Invalid, 3/4, 2/3, 1/2, 1/3, 1/4, 1/5, ALL
*2 MSW8-5	Reduce Char. V/H	100%/100%	100%/100%, 75%/100%, 50%/100%, 100%/75%, 75%/75%, 50%/75%
MSW8-6	Auto Side Shift	Invalid	Invalid, 1 dot, 2 dots, 3 dots, 4 dots, 5 dots, 6 dots, 7 dots
MSW9-1	Code Page	PC 437	PC 437, Katakana, PC 850,858, PC 860, PC 863, PC 865, PC 852, PC 866, PC 857, WPC1252, Space, PC 864, Thai Code 18
MSW9-2	Int'Char Set	USA	USA, France, Germany, England, Denmark, Sweden, Italy, Spain, Japan, Norway, Denmark 2, Spain 2, Latin America, Korea, Croatia, China
MSW9-3	Kanji	OFF	ON, OFF
MSW9-4	JIS/Shift JIS	JIS	JIS, Shift JIS (CP932), Shift JIS (X0213)
MSW10-1	Print Density	100 %	70 %, 75 %, 80 %, 85 %, 90 %, 95 %, 100 %, 105 %, 110 %, 115 %, 120 %, 125 %, 130 %, 135 %, 140 %
MSW10-2	Print Speed	Level 9	Level 1, Level 2, Level 3, Level 4, Level 5, Level 6, Level 7, Level 8, Level 9
MSW10-3	Reserved		
MSW10-4	Reserved		
MSW10-5	Reserved		
MSW10-6	Buzzer Event	Not by C.Open	All Event/Error, Not by C.Open, C.Open/PE

Notes: Precautions regarding memory switch settings

*1: MSW2-3
If the spacing expands because print feed stops during printing because transfer of print data is slow, a white streak may appear at the point that the first point it stops. It is possible to avoid the white streak by enabling MSW2-3 to improve print quality. However, it will take a little longer for printing to start.

*2: MSW8-5
If reduce character size horizontally is selected, the print range and distance between lines are also reduced. When printing on narrow paper, create print data so the print area does not extend beyond the edge of the paper.

CITIZEN SYSTEMS JAPAN CO., LTD.
6-1-12, Tanashi-cho, Nishi-Tokyo-shi Tokyo, 188-8511, Japan
Tel: +81 (0) 42 468 4608 Fax: +81 (0) 42 468 4996
http://www.citizen-systems.co.jp

TZ74967-00F
A09754E-1103